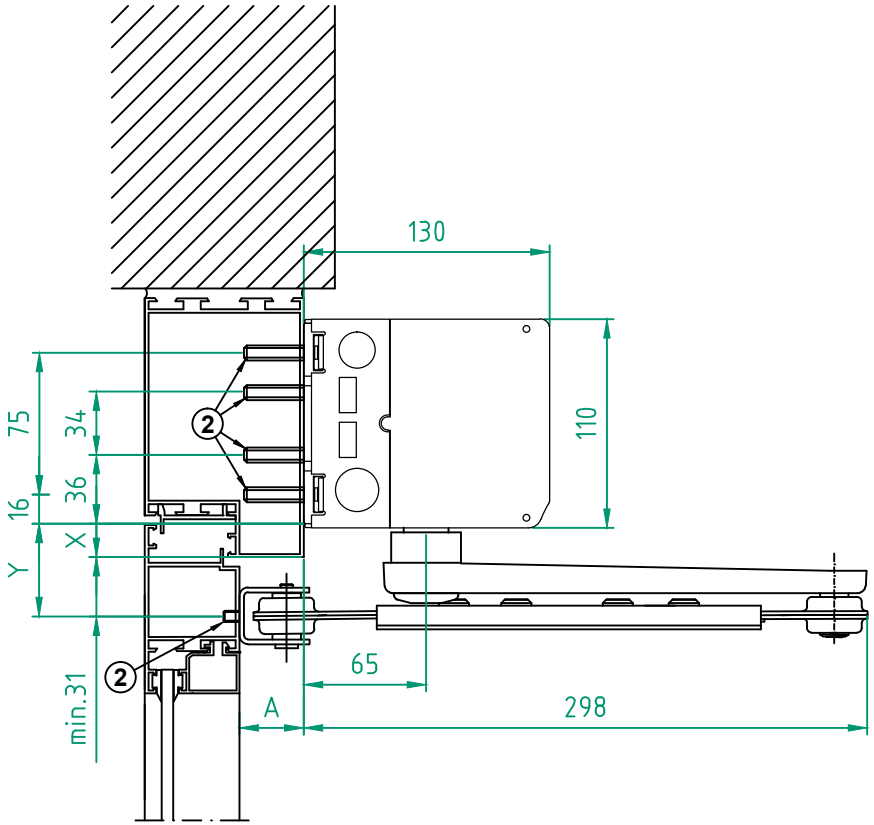

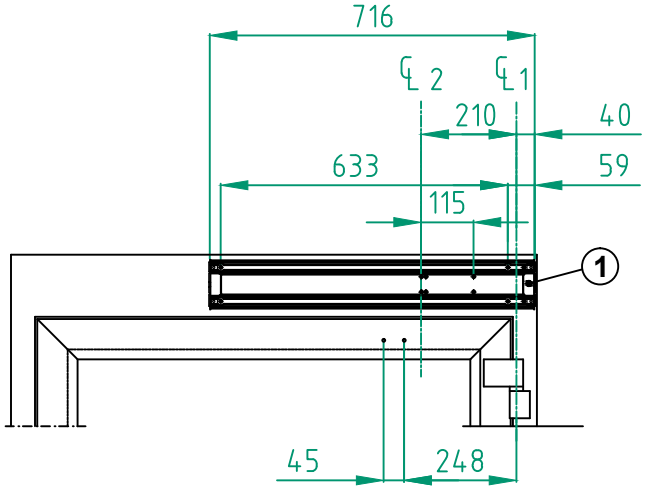

STATE WHEN ORDERING

Surface treatment
- ☐ Silver anodized
- Special anodized .....
- RAL .....
- Special powder coating .....
- .....

Cover end plates
- ☐ BK
- ☐ SI

Options see layers:
- ☐ Standard cover
- ☐ Full length cover, CL = ... mm
  S = ... mm

If S is set to "0", no cutouts will be made.

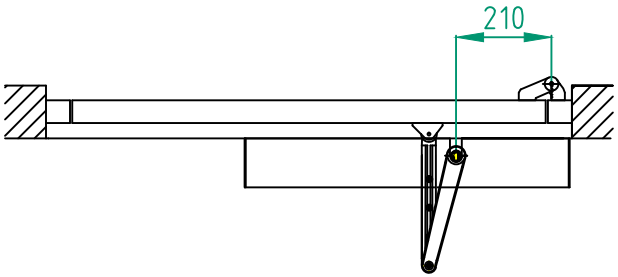

℄1 Hinges
℄2 Operator drive shaft
A Reveal A=0-100 mm, optional 330 mm
1 Cable inlet
2 Reinforcements required in door leaf and at fixing holes

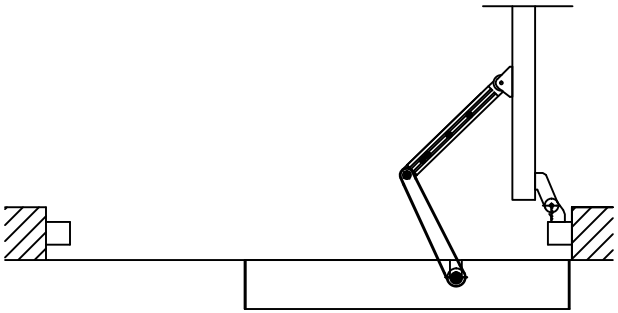

X	Y	Shaft extension
2 - 17	48	0
2 - 37	68	20
2 - 67	98	50
2 - 87	118	70

Customer:	Ref:	Besam SW100-1 Arm system PUSH DIN Left Swing door operator
Door id:	Date:	
Project No:	Sign:	

ASSA ABLOY

10.0 | 1005055-EI

© All rights in and to this material are the sole property of ASSA ABLOY Entrance Systems AB. Copying, scanning, alterations or modifications are expressly forbidden without the prior written consent of the applicable company within ASSA ABLOY Entrance Systems AB. Rights reserved for changes without prior notice.

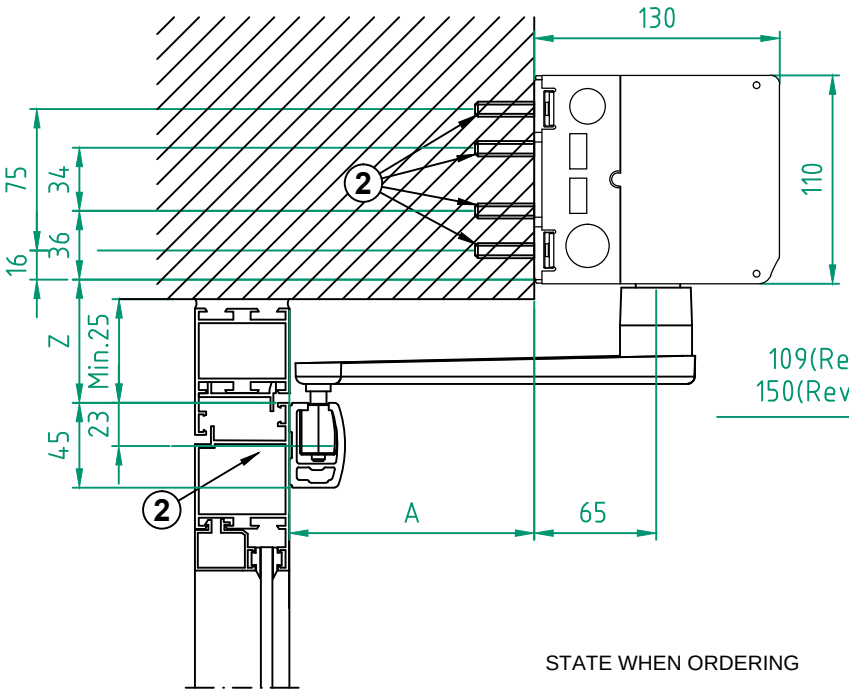

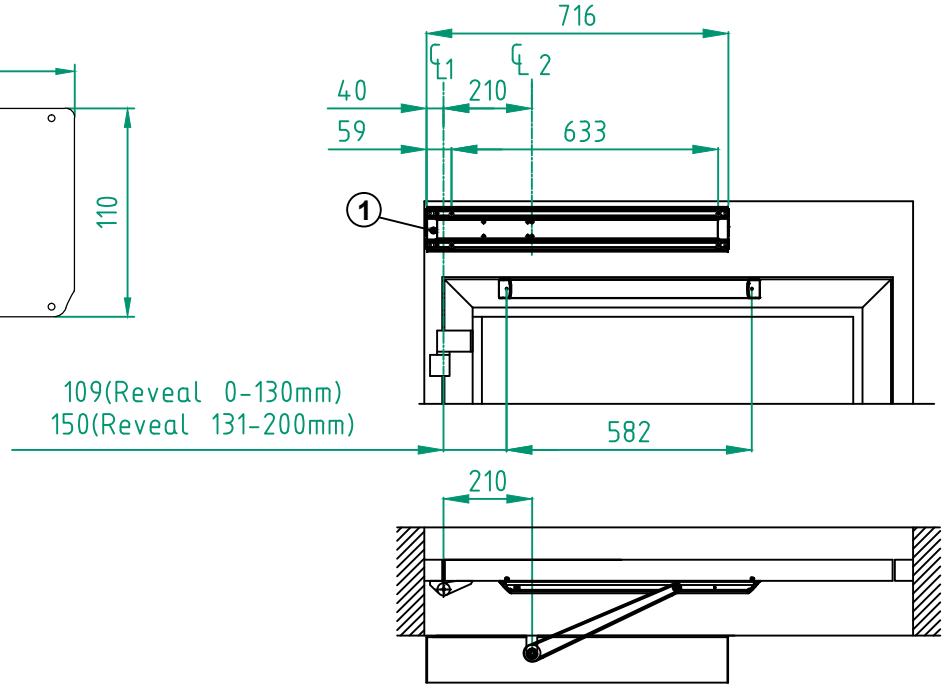

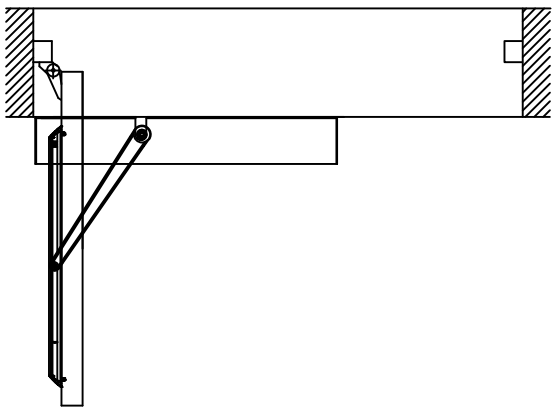

STATE WHEN ORDERING

Surface treatment
- ☐ Silver anodized

Special anodized .....
RAL .....
Special powder coating .....
.....

Cover end plates
- ☐ BK
- ☐ SI

Options see layers:
- ☐ Standard cover
- ☐ Full length cover, CL = ... mm
  R = ... mm

If R is set to "0", no cutouts will be made.

℄1 Hinges
℄2 Operator drive shaft
A Reveal A=0 - 130 mm
Reveal A=131- 200 mm
Min. door width = 750 mm
1 Cable inlet
2 Reinforcements required in door leaf and at fixing holes

Z	Shaft extension
48	0
68	20
98	50
118	70

Customer:	Ref:	Besam SW100-1 Arm system PULL DIN Left Swing door operator	ASSA ABLOY
Door id:	Date:		10.0 1005055-EI
Project No:	Sign:		

© All rights in and to this material are the sole property of ASSA ABLOY Entrance Systems AB. Copying, scanning, alterations or modifications are expressly forbidden without the prior written consent of the applicable company within ASSA ABLOY Entrance Systems AB. Rights reserved for changes without prior notice.

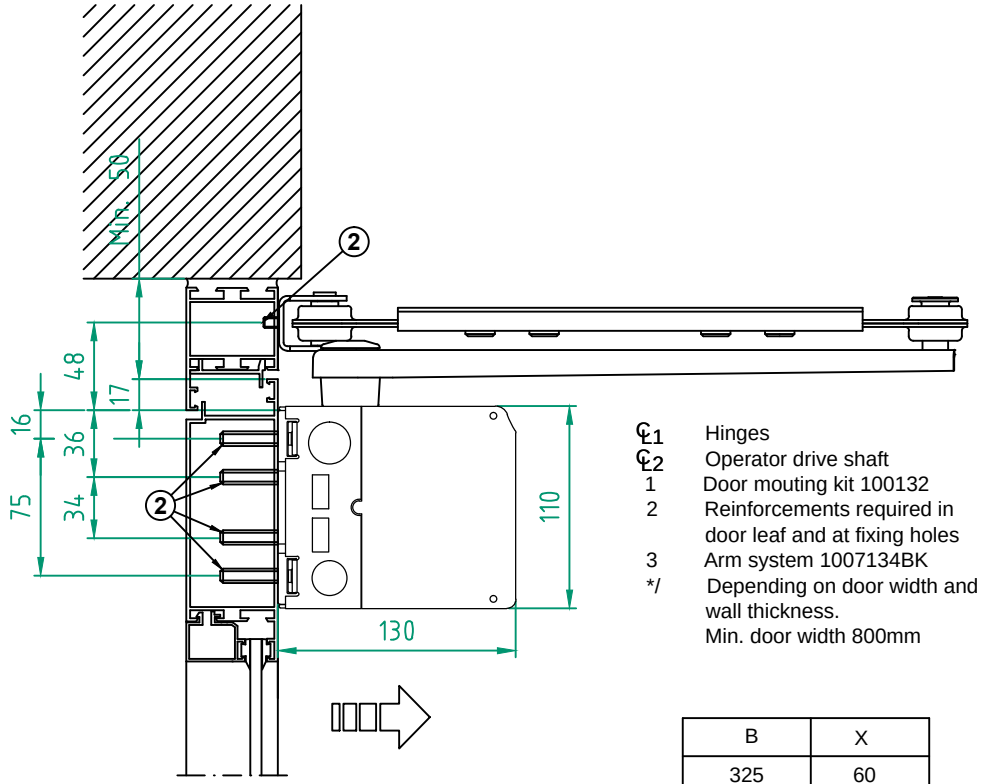

℄1 Hinges
℄2 Operator drive shaft
1 Door mouting kit 100132
2 Reinforcements required in door leaf and at fixing holes
3 Arm system 1007134BK
*/ Depending on door width and wall thickness.
Min. door width 800mm

B	X
325	60
360	70

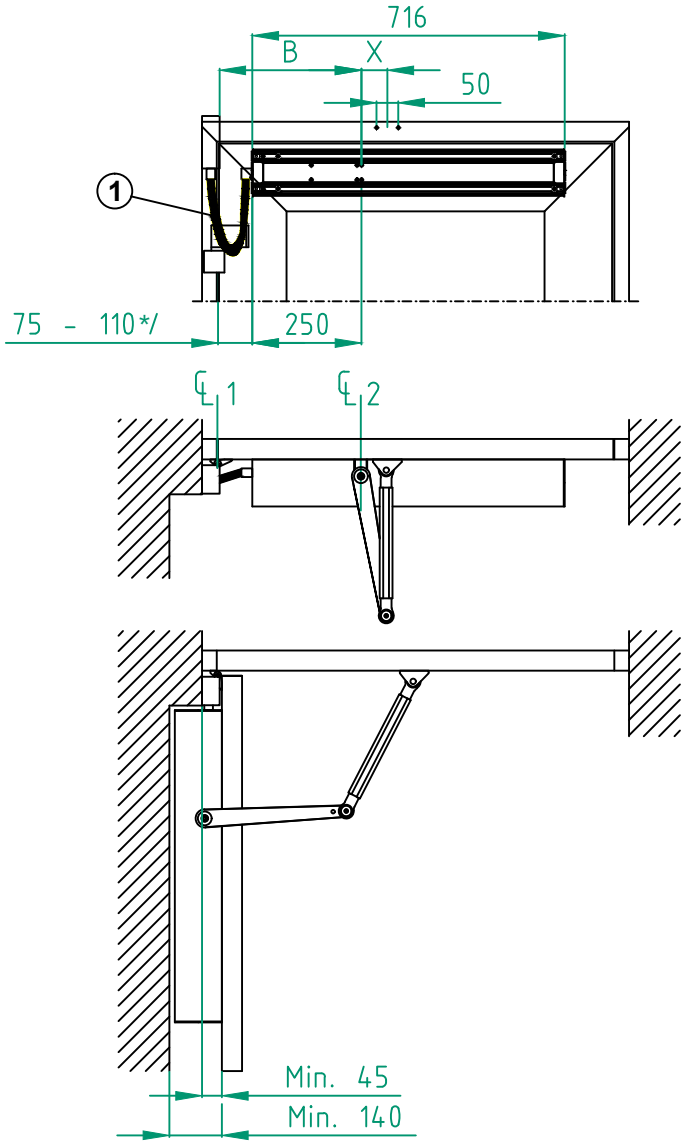

Customer:	Ref:	Besam SW100-Door mounted Arm system PUSH-325 Swing door operator	ASSA ABLOY
Door id:	Date:		10.0 1005055-EI
Project No:	Sign:		

© All rights in and to this material are the sole property of ASSA ABLOY Entrance Systems AB. Copying, scanning, alterations or modifications are expressly forbidden without the prior written consent of the applicable company within ASSA ABLOY Entrance Systems AB. Rights reserved for changes without prior notice.

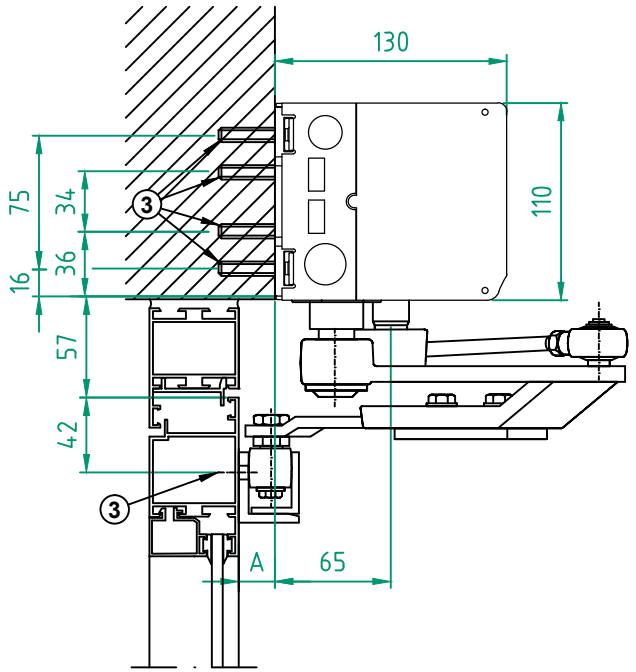

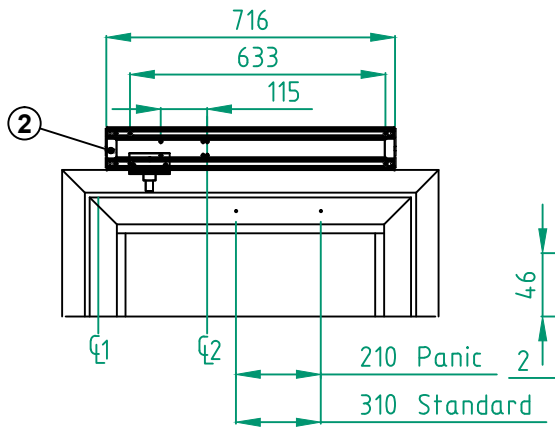

ST-V

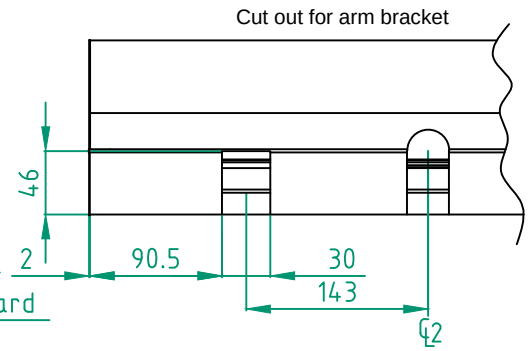

ST-H

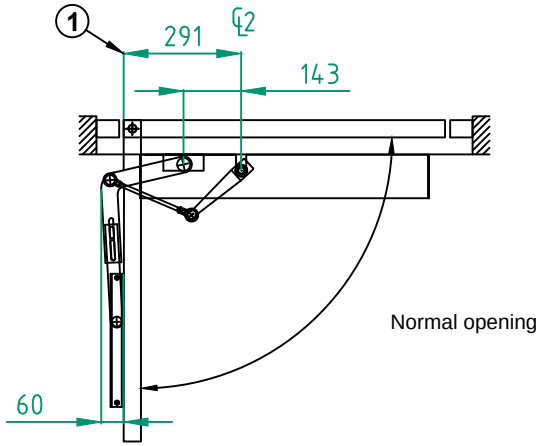

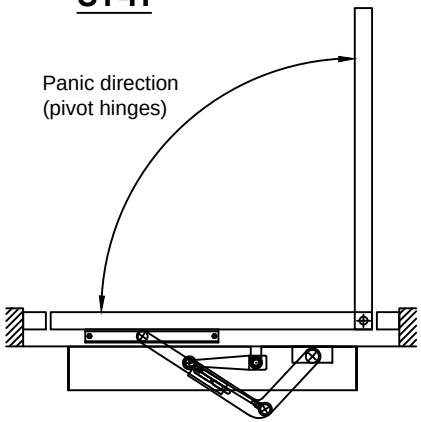

℄1	Pivot or butt hinges
℄2	Operator drive shaft
A	Standard max. reveal 100 mm
1	Outside open door
2	Cable inlet
3	Reinforcements required in door leaf and at fixing holes

Customer:	Ref:	Besam SW100 Slide track arm system ST-V/ST-H Swing door operator	ASSA ABLOY
Door id:	Date:		10.0 1005055-EI
Project No:	Sign:		

© All rights in and to this material are the sole property of ASSA ABLOY Entrance Systems AB. Copying, scanning, alterations or modifications are expressly forbidden without the prior written consent of the applicable company within ASSA ABLOY Entrance Systems AB. Rights reserved for changes without prior notice.